Evaporative Air Cooler User Manual

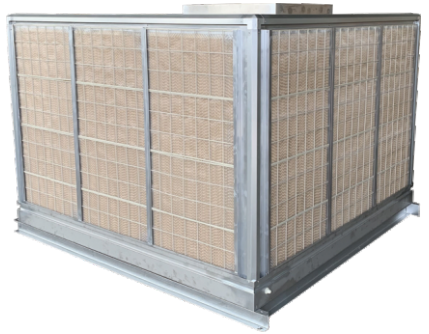

Please properly keep the manual.
Please carefully read the manual before you use the machine.

It's very important for you to read this instruction carefully before your installation of our products independently.

1.The ground surface where evaporative air coolers stand on should be solid and stable. It's a must to make sure the installation position to hold our products is in a horizontal plane in case of any damage and danger.

2.All through the course of installation, it's forbidden to connect the supply mains by anybody else in case of trouble and danger.

3.Please kindly note that our products are intended to be permanently connected to the water mains and not connected by a hose-set.

4.As far as the working voltages 380-415V are concerned, there's unnecessity for the user or installer to adjust the status of our product additionally because of its self-adaption working principle.

5.The supply mains are designed to be connected and disconnected through an electric control box with all pole switches thereof.

6.The minimum space for installation of evaporative air cooler is L*W*H=3650*3500*4560mm.

7.The dimension of LS-60 is L*W*H=2433*2293*1657mm, while that of LC-60 is L*W*H=2186*2046*1656mm.

8.It's highly recommended to support and fix the appliance with install bracket consists of corrosion-resistance steel components.

9.The minimum distance between all parts of appliance and the surrounding structures is required to be above 600mm.

10.The connection way between the appliance and the supply mains is through an electric control box where all docked terminals and connections are finished within it.

11.There are function switches for various operations on the front face of the electric control box for the sake of convenience and in case of danger emergency.

12.Thanks to the structure of supply cord is type Y attachment, we emphasize that if the supply cord is damaged, it must be replaced by the manufacturer, its service agent or similar qualified persons in order to avoid a hazard.

13.The appliance can be fixed to its support either by bolts fasteners through the drilled holes at the bottom of its four corner positions or by welding as a whole.

Evaporative Air Cooler

10. Maintenance

A. Normal maintenance

1. When pollute of the air in outside is too bad, you should to wash the outdoor units at least 2 to 3 times per week. Normally you wash the machine one time on month will be enough. The air pipe need not wash.
2. Every half a year, in outdoor units, you need to complete wash the shower tray (includes water pump, water inlet valve, water outlet valve, water level switch and so on) and paper pad curtain. The water press can not be too high when you wash them, in order to avoid inner components, and avoid water enters into air pipe.
3. When the Air Cooler need wintering, long time no use, should to close the water inlet water gate. Press the “clean” key on control board, let all the water discharged. In some snowy area, you should to have a cover on outdoor units. In order to avoid sandstorm or snow enter into the machine to destroy the paper pad curtain. You should to move the cover before you use the machine again.
4. Check or repair the machine should do by professional person. Stop the machine for overhauling should to cut the power supply, and hang a plate wrote “dangerous”.
5. You should to get rid of the fault when the machine is tripping operation by fault, then connect power supply to start the machine.
6. There will be some abnormal smell for first time use. The smell will be vanished after 24 hours continuous use.
7. The diffusers of the outdoor units can not be directly strength handle. You are forbidden to handle the diffusers when you install or move the machine.
8. The life of the batteries of the remote control is about 2 years. You should to change the batteries when there is hysteretic response when you use the remote control.
9. You should to check the immobility of the brackets for the outdoor units every year. And should do some anticorrosive solution if there is some rusty on it.

B. Particular Items

1. Should to open machine have a check after a long time no use, if you will use the machine again. Clean up all the barriers near to the air cooler (move the protect cover). Make sure the air can enter swimmingly. And check the water and power supplies, make sure the water and power supplies are good. If there is some problems, you should to check and solve before start the machine.
2. If there is abnormal smell when your first operation, should use manual wash mode. Drain all the water by several times until there is no abnormal smell.

9. General Fault and Solution

Fault	Reason	Solution
Pilot lamp don't light	1.power supply no power 2.wire of control box is cut pilot lamp is broken	1.check the power supply 2.check the wire of control box is cut or short circuitchange the pilot lamp
Can not control	1.power supply surge disturb 2.the button of the control is broken	1.cut power supply. Start the machine again. 2.change the button of the control
Normal display, but without blast	1.fan blade is inverse 2.fan blade is stop 3.alternating contactor is broken relay on the electric board without output	1.adjust the phase line 2.check if the motor is broken 3.change the alternating contactor 4.check if the relay on the electric board has output
Fault pilot lamp is light	Default phase	Check three phase four wire is connected tight
Can't control the motor	1.main magnet is broken 2.main control board is broken	1.change the contactor 2.change the main control board
Alarm with enough water	Water level control switch is broken	Change the water control switch
Can not cooling	1.no water 2.water can not enter from water inlet 3.water pump is broken 4.no output from control board	1.check if the water supply is cut 2.change the water inlet 3.change water pump 4.check if there is output from control
Can not shut down	Control board is broken	Change control board
Leakage from air pipe	1.leakage from water tank 2.have not sealed good in air pipe 3.jammed by filter of paper pad curtain 4.install wrong for water knockout vessel	1.repair or change water tank 2.seal again 3.clean or change paper pad curtain or filter 4.install the water knockout vessel at the middle of the two board
Too big noise	1.bent pipe is too crooked 2.size of air outlet is too small 3.fan blade come into the cover or fan blade is metabolic	1.remake the bent pipe as request 2.make the air outlet size to a standard size 3.change or adjust fan blade
No sound from buzzer	1.buzzer is broken 2.control board has fault	1.change buzzer 2.check the electrical board of control board for buzzer, if it has output
No display on LED	1.LED is broken 2.electrical board of control board have fault	1.change LED display 2.check if the electrical of LED on control board is regular

Evaporative Air Cooler

1. Brief Introduction

Evaporative Air Cooler is a new product, which is researched and developed by scientists from Australia, Switzerland and some Europe country.
This product has below advantages:
a. Energy-Saving: Compared to traditional Air Conditioners, it can save energy more than 80%.
b. Environmental Protection: It will never discharge harmful matters when the machine is working. And also the machine doesn't have Freon.
c. Highly Active: it can use least energy to produce biggest cooling depurative effect.
The principle of the machine is use “directly evaporate” humidify and cooling technique. Not only have cooling function, but also have humidification. It means: The air will be in negative pressure status, when the fan in the machine blow. The outdoor air will enter into the machine through wetted-pad-evaporator. And the pump in the machine will spray the water on the wetted-pad-evaporator. When the air goes through the evaporator, most of the heat and dust have been absorbed. The air goes out will be fresh, clean, humid and with low temperature.

2. Workable Area

As the evaporative air cooler have advantages on cooling, humid, clean, energy-saving and ventilation. It can use on some place need to ventilate and cooling. The product can use in below places:

a. Manufacturing industry: Textile, Machinery, Ceramics, Fine Chemistry, Metallurgy, Glass, Hardware, Leather and so on.
b. Processing Industry: Electroplating, Electron, Shoemaking, Printing and Dyeing, Plastic, Printing, Packing, Food and so on.
c. Hospital, Waiting room, School, Supermarket, washhouse.
d. Public Places: Kitchen, Market, Large Amusement Center, Underground Park, Station and so on
e. Breeding Farm: Greenhouse, Flowers, Poultry, Herding and so on.
f. Configure and Installation for some place has air conditioners or ventilation equipment.

3. Attentions

a. Forbid to overlapping pile up, extrusion, roll over, inversion and gruff move.
b. Forbid some laypeople open the cover to maintenance. Can not privately docking or change the control line.
c. Make sure the cut the main switch and there is some people guard, then to touch the machine.
d. Forbid open fire, or electric welding and gas welding to touch the wetted pad evaporator. Otherwise it will be easy to cause fire.

4. Spare Parts List

Spare part pack	1 piece	Instruction manual	1 piece

5. Operational Directory and Function Description

Features of single speed reduction voltage start control box
1. There are three modes: cooling, air supply and cleaning;
2. good operation interface;
3. Strong anti-interference ability;
4. Linear appearance controller: Picture A

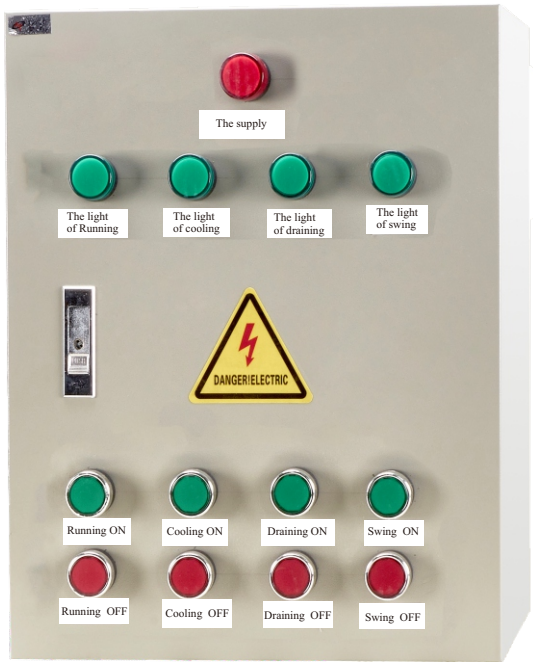

Picture A

Technical Demand
1. Use 40*40*4 angle-iron frame to connect the wall or shutter bolt.
2. All the gaps should be hermetic by glass cement or cement mortar.
3. The sectional area of the blast bent pipe should be no less than 0.45 square meters.
4. Trigonal bracket should be firm.
5. The bracket and machine should be horizontal.
6. All the outdoor air pipe parts should be deal with waterproof.
7. The osculant place between the bottom of the machine and bracket should fill up anti-vibration pad.
8. It should have enough strength if install the machine on zinc iron framed timber. It should have enough strength to absorb the machine.
9. The size of the hole of the roof or wall should be 20mm bigger than the size of the air pipe. Otherwise can not make waterproof process.
10. There should be enough place for air inlet and maintain.
11. The pipe pass wall or window should calculate the size of the sectional area. But can not less than 0.45 square meters.
12. If the supply cord is damaged,it must be replaced by the manufacturer,its service agent or similarly qualified persons in order to avoid a hazard.

8. Technical data

When you install this machine, you should install it refer to the user manual. Lay people or person don't have related training, is forbidden to install. Items should attention as below:

1. The circumstance for install the machine should supply 1.5 kg/cm² water supply.
2. The machine should install at outdoor or some place has enough return air.
3. The blast pipe can not be too long. and can assure acreage of the blast pipe no less than acreage of machine. Total acreage of all the diffusers no less than 1.5 times of acreage of pipe.
4. The direction of blast is better use straight blast. If need bent pipe, the radius for rate of curving should be at least double than diameter of the air pipe.
5. Should add a filter screen before the water inlet pipe enter into the machine.
6. The maximum inlet water pressure shall be no more than 0.6MPa;The minimum inlet water pressure shall be no less than 0.15MPa.

spec	LC-60	LS-60
max airflow(m^3/h)	60000	60000
voltage/frequency(V 3~/Hz)	380-415/50	380-415/50
electric current(A)	37.5-36.3	37.5-36.3
power(kW)	18.5	18.5
size of air outlet(mm)	920×855	920×855
control mode	control box	control box

Side discharge machine Installation Drawing

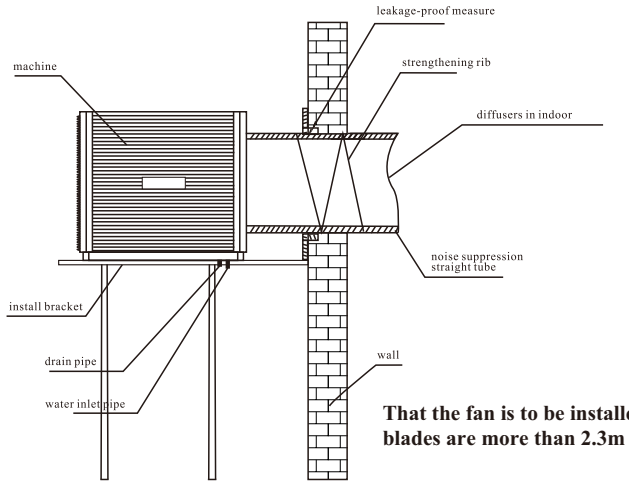

That the fan is to be installed so that the blades are more than 2.3m above the floor.

Top discharge machine Installation Drawing

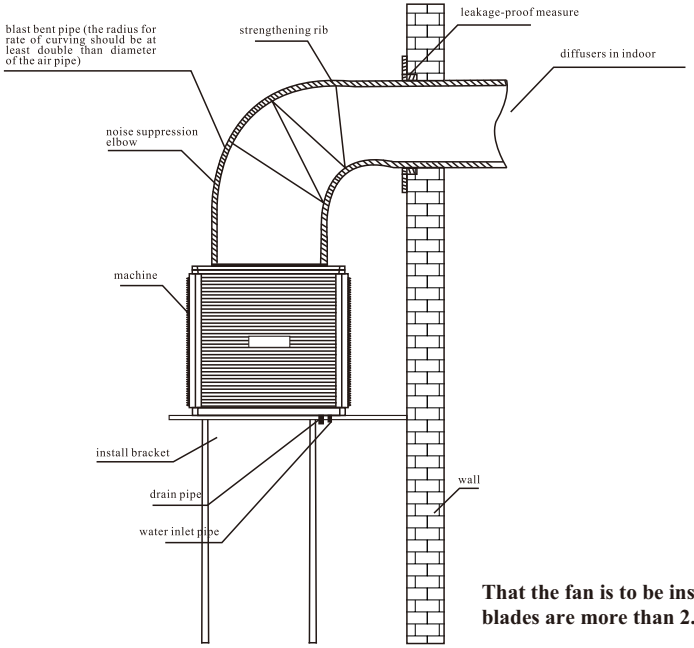

That the fan is to be installed so that the blades are more than 2.3m above the floor.

Evaporative Air Cooler

Instruction manual of ordinary switch type electric control box

The ordinary switch type electric control box is used to control the open and close of the valve, can be used for on-site (in-site) control and remote centralized control (remote); according to the box type, there are wall-mounted type and floor-mounted type, and the floor-mounted type adopts any theoretical height pillar or frame type;

(1)Basic technical data:
①Power supply: 380-415V 3~/50Hz three-phase four-wire system;
②Power indication (red button) → fan operation (green button) → cooling indication (green button) → drainage indication (green button) → swing indication (green button)
③Fan start (green button) → Cooling start (green button) → Drain start (green button) → Swing start (green button)
④Fan stop (red button) → Cooling stop (red button) → Drain stop (red button) → Drain stop (red button)
⑤Working temperature;
（1. Ambient temperature:0-40°C;
（2. Relative humidity: ≤85% (20 °C);
（3. There is no strong corrosive, flammable and explosive medium and conductive dust around;

(2)Working principle:
The electrical appliances working principle of the control box: the circuit diagram consists of main circuit, control circuit and display circuit, and main components are installed in the electric control box;

(3)Installment and debug:
①Fix the control box matched with the electric box on the wall or bracket;
②According to the electrical schematic of the control box (usually inserted behind the control panel in the box) and the terminal wiring diagram, connect the terminals of the control box and the electric device with the cable according to the corresponding line number, and connect ground wire properly.
③Connect the three-phase power supply to the corresponding terminals of the control box.
④When the valve is in the middle position, press the "open valve" or "close valve" button to check whether the rotation direction of the valve is consistent with the button, if not, replace the motor power phase sequence;
⑤On the control panel equipped with an opening meter, check whether the pointer of the opening meter is normal during the process of "opening" and "closing" the valve; when the valve is in the "full open" position, check whether the pointer of the opening meter indicates At the time of full scale, if there is an error, adjust the potentiometer on the panel to fine-tune;
⑥On the basic control panel, when the valve is fully open, the red "open valve" indicator on the control panel light up, indicating "valve fully open"; when the valve is fully closed, the green "close valve" on the control panel "Indicator light up, indicating" valve fully closed "; when the valve is open to over-torque or closed to over-torque, the" stop "indicator on the control panel is on, indicating "malfunction ";
⑦When the selector switch on the control panel is set to "in-site", it means that it is suitable for operation on this control box, and when it is set to "remote", it is suitable for control in a remote control room;

Special note: Since the control box is used with electric actuators, as the electric actuators manufacturer is different, for specific wiring and installation, please refer to the instruction manual of the valve electric device.

6. Electrical principle diagram for control

1、Single speed reduction voltage start control box

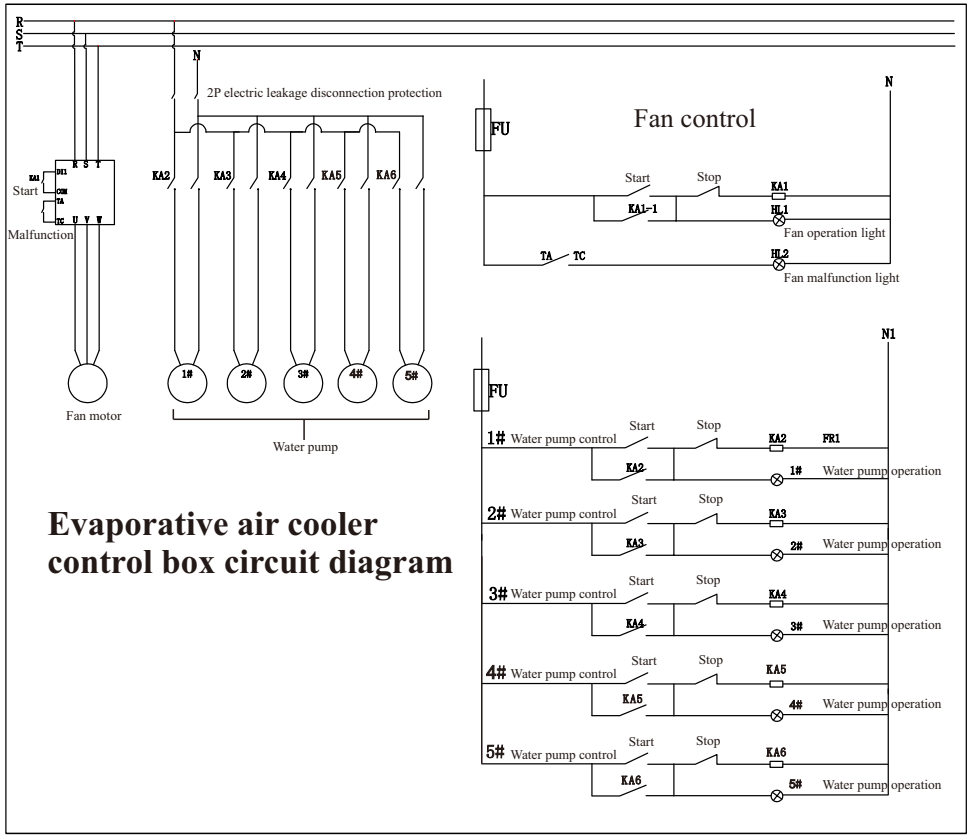

Evaporative air cooler control box circuit diagram

Note:

1.If don't connect the float valve switch, the machine can work normally. But will not protect the machine if there is not enough water.

2.Appliances intended to be connected to the water mains shall be constructed to prevent backsiphonage of non-potable water into the water mains.

3.It's a must for our products to be all-pole disconnected from the supply mains to ensure a thorough disconnection incorporated in the fixed wiring.

7. Fix Illuminate

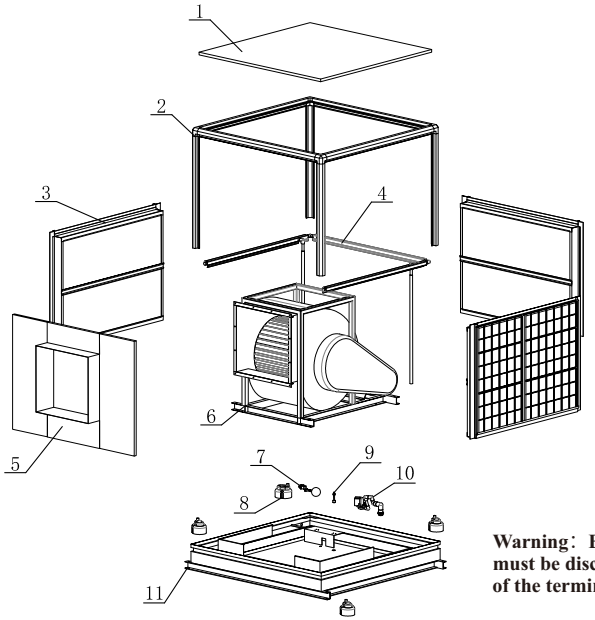

No.	Name	Qty
1	Top Cover	1
2	Frame	1
3	Evaporative components	3
4	Water distributor components	1
5	Front air grill	1
6	Centrifugal motor	1
7	Float ball	1
8	Water pump	4
9	Water level sensor	1
10	Drainage components	1
11	Water tank base	1

Warning：Before obtaining access to terminals,all supply circuits must be disconnected.This warning shall be placed in the vicinity of the terminal cover.

Side air outlet model structure diagram

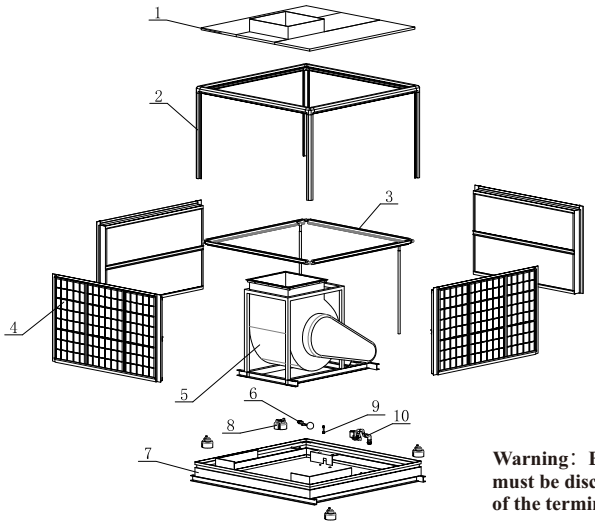

No.	Name	Qty
1	Top air outlet	1
2	Frame	1
3	Water distributor components	1
4	Evaporative components	4
5	Centrifugal motor	1
6	Float ball	1
7	Water tank base	1
8	Water pump	4
9	Water level sensor	1
10	Drainage components	1

Warning：Before obtaining access to terminals,all supply circuits must be disconnected.This warning shall be placed in the vicinity of the terminal cover.

Top air outlet model structure diagram